Waterproof Devices

Description



The 48 WATERPROOF Series ensures a **IP65 Protection Degree** in electrical installations in wet and dusty spaces.

Manufactured in technical thermoplastic (**shock resistant**), the 48 WATERPROOF Series is the best solution for installations in garages, gardens, swimming pools, industrial spaces, etc.

BR - White (RAL 9003) and **CZ** - Grey (RAL 7035)

Characteristics

Mechanisms in Technical Thermoplastic - resistant material, non-conductive.

Control Devices

10 A - 250 V~

Screw connection. It allows the usage of rigid and flexible cable.

Pilot Light.

In accordance with IEC/EN 60669-1 Standard, tested according to 19.3:

Relationship between rated current of the switch and rated power of the SBL circuit	
Rated current of the switch, In [A]	Rated power of the SBL circuit [W]
In ≤ 10	100
10 < In ≤ 13	150
13 < In ≤ 16	200
16 < In ≤ 20	250

SBL - Self Ballasted Lamp (CFL or LED)

Energy Sockets

Schuko and French Sockets

16 A - 250 V ~

Screw connection.

In accordance with IEC 60884-1; DIN VDE 0620-1 (Schuko) and NF C 61-314 (French) Standards

Energy Sockets: Single, Double Vertical and Horizontal

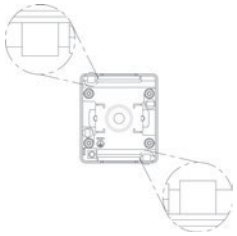

Variety of Functions: Control Devices, Blinds Control, Energy Sockets, etc.

Draining Holes: All the products of the WATERPROOF 48 Series have two pre-drilled draining holes.
Depending on the mounting position of the product, the draining hole pointing to the lower part of the base must be open.

Dimensions (mm)

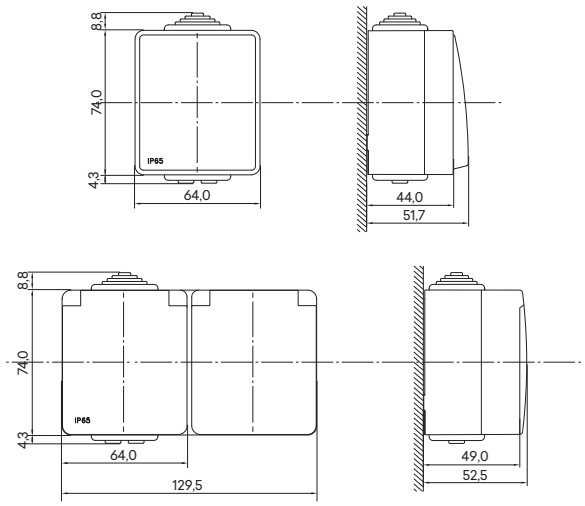

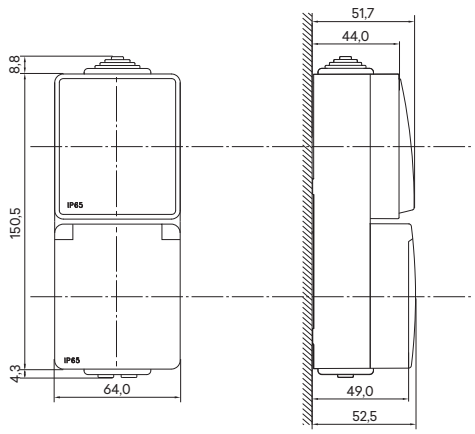

Wiring Diagrams

Single Pole Switch

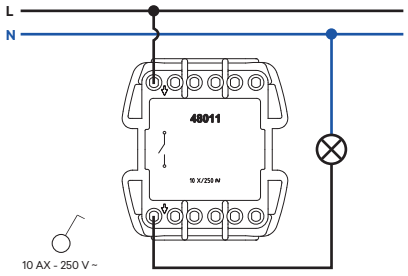

Single Pole Switch with Orienting Light

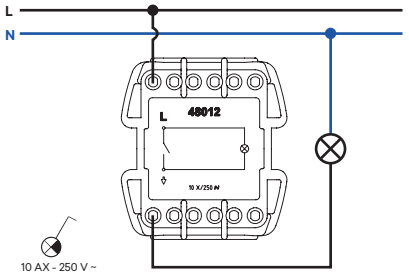

Single Pole Switch with Pilot Lamp

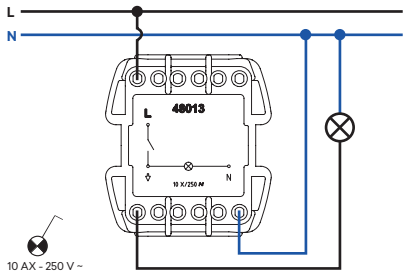

Two-pole Switch

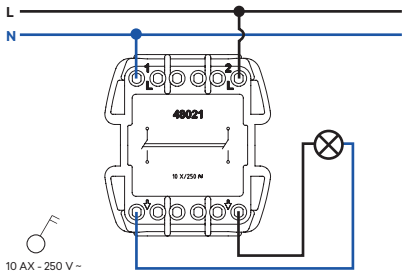

Two-pole Switch with Pilot Lamp

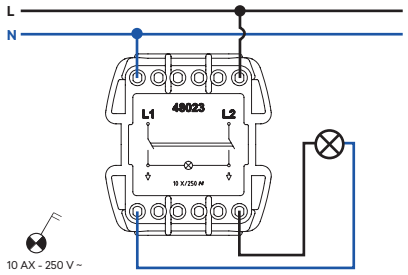

Two Circuits Switch

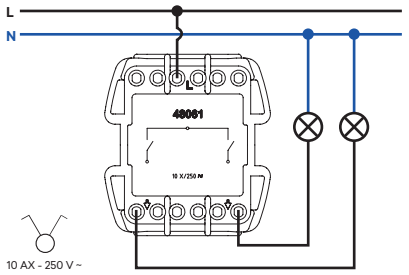

Two-way Switch

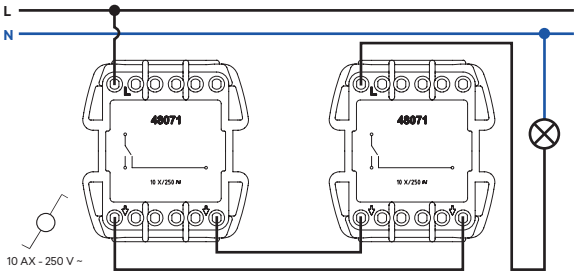

Two-way Switch with Orienting Light

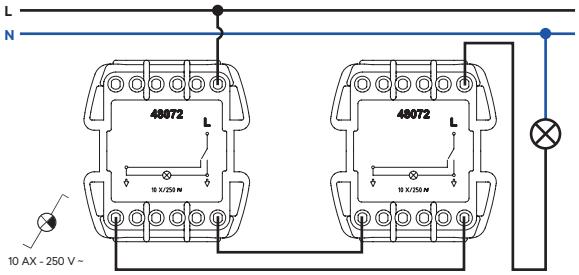

Wiring Diagrams

Two-way Switch with Pilot Lamp

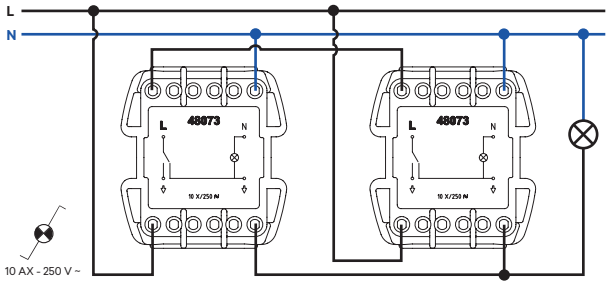

Double Two-way Switch

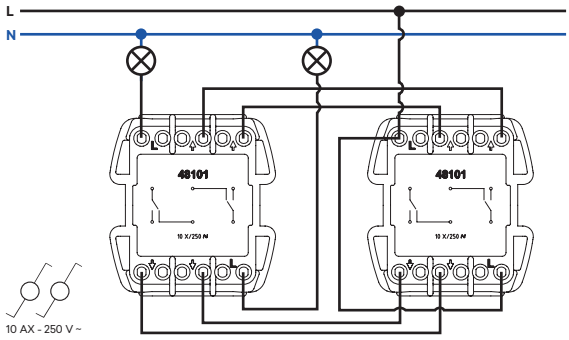

Intermediate Switch

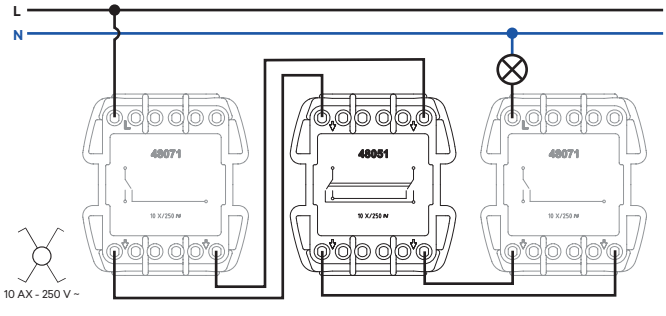

Intermediate Switch with Orienting Light

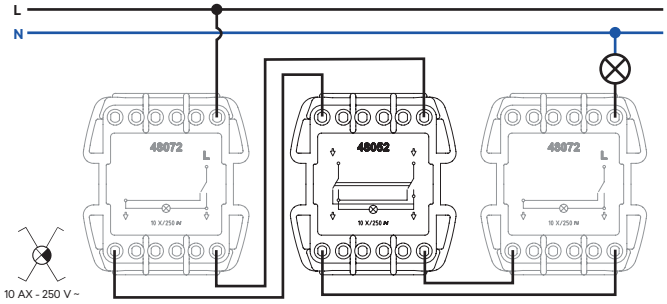

Rocker Push-button

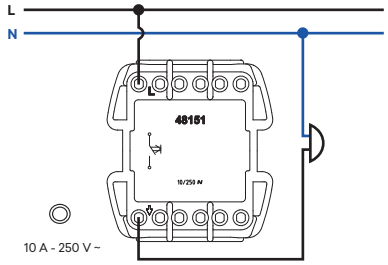

Rocker Push-button with Orienting Light 250 V ~

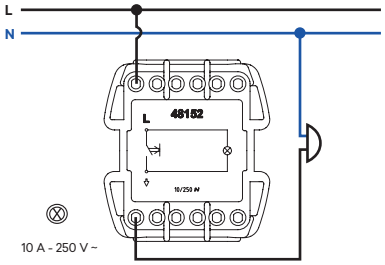

Rocker Push-button with Orienting Light 12 V ⎓

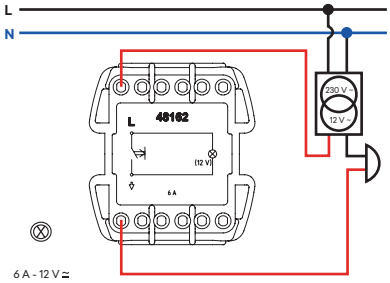

Venetian Switch

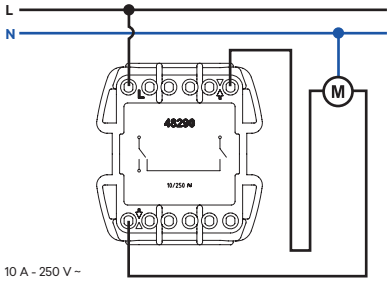

Wiring Diagrams

Venetian Double Push-button

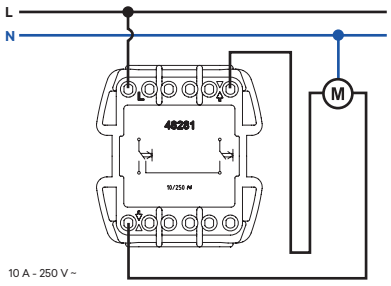

Venetian Double Push-button for Multiple Points Blinds Control
(Control for 1 point)

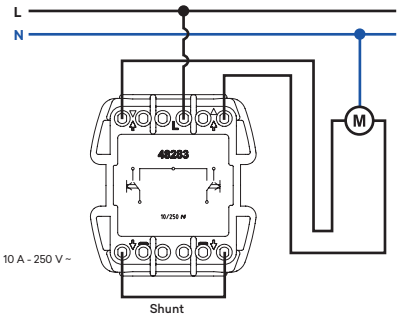

Venetian Double Push-button for Multiple Points Blinds Control
(Control from 2 or several points)

