Frames and Fixing Adapters - Dimensions (mm)

Ref. 45993 - Fixing Adapter

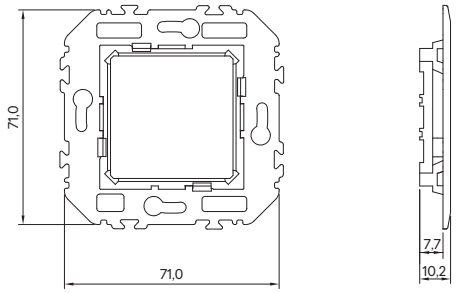

Ref. 45994 - Fixing Adapter with Claws

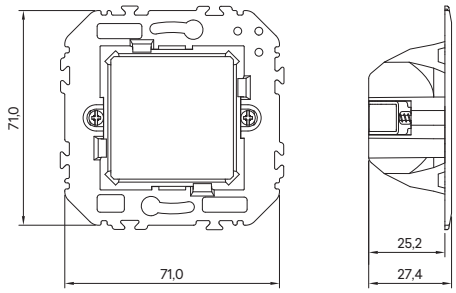

Ref. 43910 T - SV Single

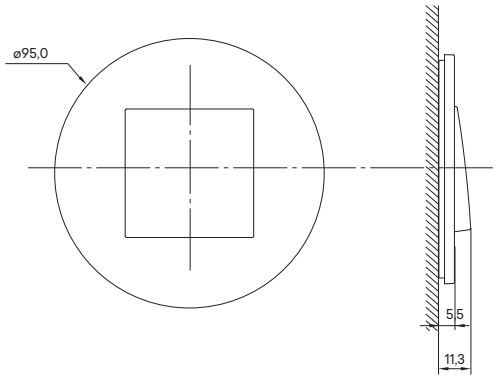

Ref. 43920 T - SV Double

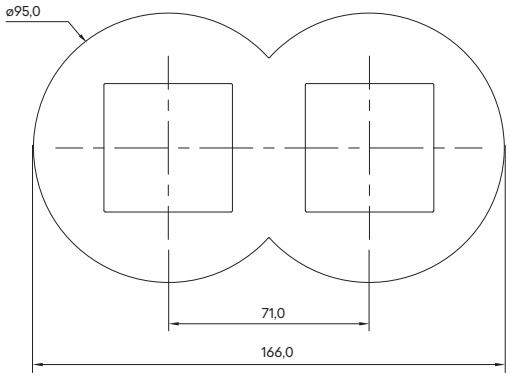

Ref. 43930 T - SV Triple

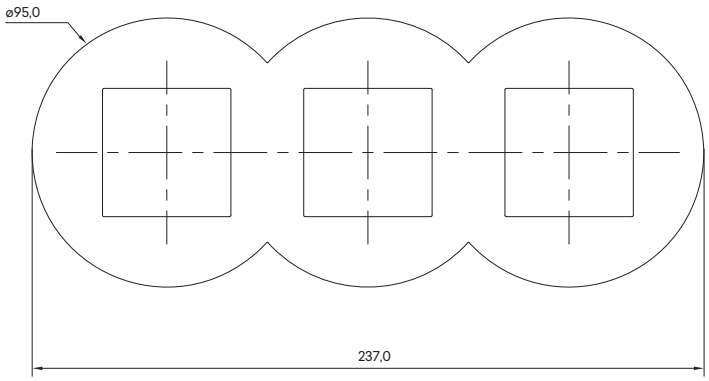

Ref. 43940 T - SV Four-Gang

