Surface Mounting Devices

Description



With a discreet design, the **3700** Series is presented as a **versatile option for installations in professional or public spaces** (shops, offices, schools, ...).

To be used in **surface mounting** installations and in installations with the **10 ETS - Cable Trunkings**.

Product sold in complete version.

BR - White (RAL 9003), the same used in EFAPEL Cable Trunkings.

Characteristics

Mechanisms in Technical Thermoplastic - resistant material, non-conductive.

Control Devices
10 A - 250 V~
Screw connection. It allows the usage of rigid and flexible cable.
Pilot Light.
In accordance with IEC/EN 60669-1 Standard, tested according to 19.3:

Relationship between rated current of the switch and rated power of the SBL circuit	
Rated current of the switch, In [A]	Rated power of the SBL circuit [W]
In ≤ 10	100
10 < In ≤ 13	150
13 < In ≤ 16	200
16 < In ≤ 20	250

SBL - Self Ballasted Lamp (CFL or LED)

Energy Sockets
Schuko and French Sockets
16 A - 250 V ~
Screw connection.
Available in colors White, Red and Orange
In accordance with IEC 60884-1; DIN VDE 0620-1 (Schuko) and NF C 61-314 (French) Standards

Variety of Functions: Control Devices, Blinds Control, Energy Sockets; Radio, Television and Satellite Sockets, Telephone Sockets, Data Sockets, etc.

Adaptable to all 10 ETS Cable Trunkings - Mini Cable and Skirt using the lateral adapter for each of the cable trunkings.

Dimensions (mm)

Switch

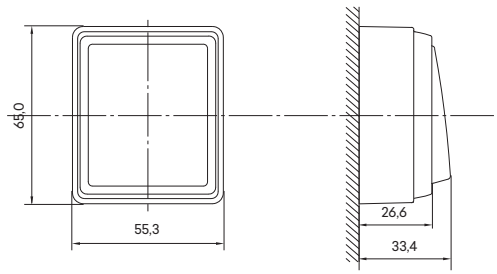

Socket

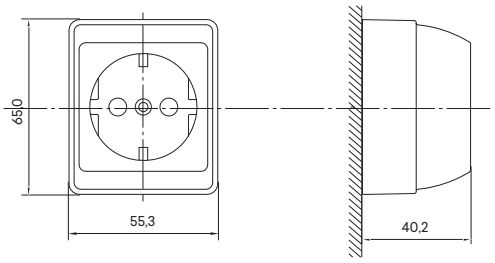

Surface Mounting Devices

Description



The **47** Series was designed to be used in surface mounting electrical installations and with the **10 ETS - Cable Trunkings**.

The **47** Series is the versatile solution to residential spaces, offices, schools, etc.

Product sold in semi-assembled version.

BR - White (RAL 9003), the same used in EFAPEL Cable Trunkings.

Characteristics

Mechanisms in Technical Thermoplastic - resistant material, non-conductive.

Control Devices
10 A - 250 V~
Screw connection. It allows the usage of rigid and flexible cable.
Pilot Light.
In accordance with IEC/EN 60669-1 Standard, tested according to 19.3:

Relationship between rated current of the switch and rated power of the SBL circuit	
Rated current of the switch, In [A]	Rated power of the SBL circuit [W]
In ≤ 10	100
10 < In ≤ 13	150
13 < In ≤ 16	200
16 < In ≤ 20	250

SBL - Self Ballasted Lamp (CFL or LED)

Energy Sockets
Schuko and French Sockets
16 A - 250 V ~
Screw connection.
Available in colors White, Red and Orange
In accordance with IEC 60884-1; DIN VDE 0620-1 (Schuko) and NF C 61-314 (French) Standards

Variety of Functions: Control Devices, Blinds Control, Energy Sockets, Radio, Television and Satellite Sockets, Telephone Sockets, Data Sockets, etc.

Adaptable to all 10 ETS - Cable Trunkings - Mini Cable and Skirt using the lateral adapter for each of the cable trunkings.

Dimensions (mm)

Switch with Box

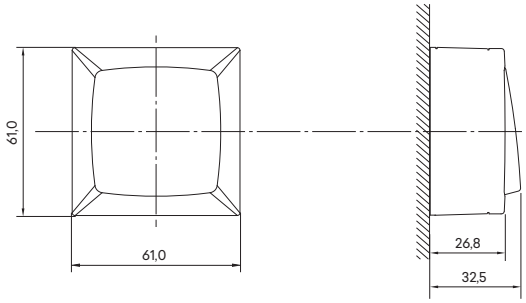

Socket with Box

